KACO new energy.

KACO blueplanet 3.0 NX3 M2
KACO blueplanet 5.0 NX3 M2
KACO blueplanet 8.0 NX3 M2
KACO blueplanet 10.0 NX3 M2
KACO blueplanet 15.0 NX3 M2
KACO blueplanet 20.0 NX3 M2

Manual

- **English translation of German original**

⚠ Authorised electrician
Important safety instructions

These instructions are part of the product and must be observed. It is available online via our homepage and corresponds to the current hardware version. The copyright for this documents lies solely with KACO new energy GmbH.

Legal provisions

The information contained in this document is the property of KACO new energy GmbH. Publication, in whole or in part, requires the written permission of KACO new energy GmbH.

KACO warranty

The latest version of our warranty conditions is available for download at http:/www.kaco-newenergy.com in the download folder.

Definitions on product designations

In this Manual the product „Photovoltaic feed-in inverter “designated as a device for reading reasons.

Trademarks

All brand and product names used in this document are trademarks or registered trademarks, A lack of identification does not mean that a product or designation/logo is free of trademarks.

Software

This device contains open-source software developed by third parties and in some cases licensed under GPL and/or LGPL.

Further details on the subject and a list of the open-source software used as well as the associated licence texts can be found in the associated "KACO NX Setup" APP in the "Info" menu under "License Wifi-Stick" and "Licence Mobile-APP".

Table of contents

1 General information ... 1

1.1 About this document ... 1

1.2 More information ... 1

1.3 Layout of Instructions ... 1

1.4 Target group ... 2

1.5 Identification ... 3

2 Safety ... 4

2.1 Proper use ... 4

2.2 Protection features ... 5

3 Description of the device ... 6

3.1 Mode of operation ... 6

3.2 System layout ... 6

4 Technical data ... 7

4.1 Electrical Data ... 7

4.2 General Data ... 8

4.3 Environmental Data ... 8

5 Transportation and Delivery ... 9

5.1 Scope of delivery ... 9

5.2 transporting the device ... 9

5.3 Installation tool ... 9

6 Assembly and preparation ... 10

6.1 Choosing the installation location ... 10

6.2 Unpacking the device ... 11

6.3 Fastening the mount ... 12

6.4 Installing and securing the device ... 12

7 Installation ... 14

7.1 General information ... 14

7.2 Surveying the connection area ... 14

7.3 Making the electrical connection ... 14

7.4 Connecting the device to the power grid ... 15

7.5 Connect PV generator to device ... 16

7.6 Creating equipotential bonding ... 20

7.7 Connecting the interfaces ... 21

7.8 Connecting Smart-Meter for dynamical feed-in ... 23

8 Commissioning ... 24

8.1 Requirements ... 24

8.2 Preconditions relating to standards ... 24

9 Configuration and operation ... 25

9.1 Initial start-up ... 25

9.2 Signal elements ... 25

9.3 Monitoring the device ... 26

9.4 Active power control with smart meter ... 26

9.5 Performing a firmware update ... 27

10 Maintenance and troubleshooting ... 28

10.1 Visual inspection ... 28

10.2 Cleaning ... 28

10.3 Shutting down for maintenance / troubleshooting ... 29

10.4 Disconnecting connections ... 30

11 Decommissioning and dismantling ... 31

11.1 Switching off the device ... 31

11.2 Uninstalling the device ... 31

11.3 Disassembling the device ... 32

11.4 Packaging the device ... 32

11.5 Storing the device ... 32

12 Disposal ... 32

13 Service and warranty ... 32

14 Appendix ... 33

14.1 EU Declaration of Conformity ... 33

1 General information

1.1 About this document

⚠ WARNING

Improper handling of the device can be hazardous!

› You must read and understand the manual in order to install and use the device safely!

Other applicable documents

During installation, observe all assembly and installation instructions for components and other parts of the system. These instructions also apply to the equipment, related components and other parts of the system.

Some of the documents which are required to register your system and have it approved are included with the manual.

Storing the documents

These instructions and other documents must be stored near the system and be available at all times.

- The current version of the manual can be downloaded from www.kaco-newenergy.com.

German original version

This document has been produced in several languages. The german-language version is the original version. All other language versions are translations of the original version.

1.2 More information

Links to more detailed information can be found at www.kaco-newenergy.com.

Document title	Document type
Technical data sheet	Product flyer
Remote access via iOS / Android App	Application note – Installation and use of the APP
Communication structure without/with data logger	Application note
Modbus protocol	Application note
SunSpec Information Model Reference	Application note
Software package	Application note
Firmware	Automatically update for iOS / Android App
EU Declaration of Conformity Country-specific certificates Certification for specific subassembly	Certificates

1.3 Layout of Instructions

1.3.1 Symbols used

	General hazard		Fire and risk of explosion
	Electrical voltage		Risk of burns
	Earthing - ground conductor		

1.3.2 Safety warnings symbols guide

DANGER

High risk

Failure to observe this warning will lead directly to serious bodily injury or death.

WARNING

Potential risk

Failure to observe this warning may lead to serious bodily injury or death.

CAUTION

Low-risk hazard

Failure to observe this warning will lead to minor or moderate bodily injury.

NOTICE

Risk of damage to property

Failure to observe this warning will lead to property damage.

1.3.3 Additional information symbols

NOTE

Useful information and notes

Information that is important for a specific topic or objective, but that is not safety-relevant.

1.3.4 Symbols for instructions

↻ Prerequisite for use.

1 Carry out the next step

2 Additional action sequence

⇨ Interim result of the action

» End result

1.4 Target group

All activities described in the document may only be carried out by specially trained personnel with the following qualifications:

- Knowledge about how an inverter functions and operates
- Knowledge of the Modbus specifications
- Knowledge of the SunSpec Modbus specifications
- Training in the handling of hazards and risks during the installation and operation of electrical devices and systems.
- Education concerning the installation and start-up of electrical devices and systems.
- Knowledge of applicable standards and directives.
- Knowledge and adherence to this document with all safety notices.

1.5 Identification

You will find the name plate with the following data for service and other requirements specific to installation on the right side panel of the product:

– Product name
– Part no.
– Serial number
– Date of manufacture
– Technical data
– Disposal information
– Certification marking, CE marking.

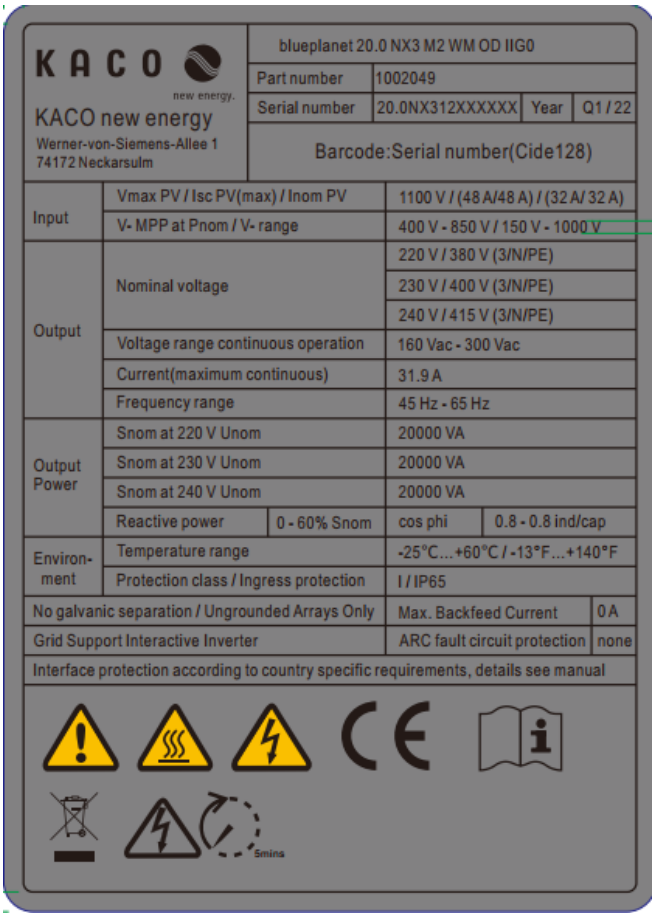

KACO new energy
Werner-von-Siemens-Allee 1
74172 Neckarsulm

blueplanet 20.0 NX3 M2 WM OD IIG0			
Part number	1002049		
Serial number	20.0NX312XXXXXX	Year	Q1 / 22
Barcode:Serial number(Cide128)			

Input	Vmax PV / Isc PV(max) / Inom PV	1100 V / (48 A/48 A) / (32 A/ 32 A)	
	V- MPP at Pnom / V- range	400 V - 850 V / 150 V - 1000 V	
Output	Nominal voltage	220 V / 380 V (3/N/PE)	
		230 V / 400 V (3/N/PE)	
		240 V / 415 V (3/N/PE)	
	Voltage range continuous operation	160 Vac - 300 Vac	
	Current(maximum continuous)	31.9 A	
	Frequency range	45 Hz - 65 Hz	
Output Power	Snom at 220 V Unom	20000 VA	
	Snom at 230 V Unom	20000 VA	
	Snom at 240 V Unom	20000 VA	
	Reactive power 0 - 60% Snom	cos phi	0.8 - 0.8 ind/cap
Environ-ment	Temperature range	-25°C...+60°C / -13°F...+140°F	
	Protection class / Ingress protection	I / IP65	
No galvanic separation / Ungrounded Arrays Only		Max. Backfeed Current	0 A
Grid Support Interactive Inverter		ARC fault circuit protection	none
Interface protection according to country specific requirements, details see manual			

Fig. 1: Name plate

2 Safety

DANGER

Lethal voltages are still present in the connections and cables of the device even after the device has been switched off and disconnected!

Severe injuries or death may occur if the cables and/or terminals/busbars in the device are touched.

- › Do not open the product.
- › The device must be mounted in a fixed position before being connected electrically.
- › Comply with all safety regulations and current technical connection specifications of the responsible power supply company.
- › The device is only permitted to be mounted, installed and commissioned by a qualified electrician.
- › Switch off the grid voltage by t turning off the external circuit breakers.
- › Do not touch the cables and/or terminals/busbars when switching the device on and off.
- › Check that all AC and DC cables are completely free of current using a clip-on ammeter.

The electrician is responsible for observing all existing standards and regulations. The following applies:

1. Keep unauthorised persons away from the device and/or system
2. In particular, making sure that the locally applicable version of the standard [1] "Requirements for special installations or locations – solar photovoltaic (PV) power supply systems" is observed
3. Ensure operational safety by providing proper grounding, conductor dimensioning and appropriate protection against short circuiting
4. Observe all safety instructions on the product and in these operating instructions
5. Switch off all voltage sources and secure them against being inadvertently switched back on before performing visual inspections and maintenance
6. When taking measurements on the live device:
   - Do not touch the electrical connections
   - Remove all jewellery from wrists and fingers
   - Ensure that the testing equipment is in safe operating condition
7. Modifications to the surroundings of the device must comply with the applicable national and local standards
8. When working on the PV generator, in addition to disconnecting this from the grid it is also necessary to switch off the DC voltage using the DC isolator switch on the device

2.1 Proper use

The device is a transformerless PV inverter which converts the direct current of the PV generator into grid-compatible three-phase alternating current and then feeds the three-phase alternating current into the public power grid.

The device is built using state-of-the-art technology and in accordance with the recognized safety rules. Nevertheless, improper use may cause lethal hazards for the operator or third parties, or may result in damage to the product and other property.

The device is intended for indoor and outdoor applications and may only be used in countries for which it has been approved or for which it has been released by KACO new energy and the grid operator.

Operate the device only with a permanent connection to the public power grid. The country and grid type selection must be commensurate with the respective location and grid type.

The requirements of the grid operator must be met for grid connection to take place. The permission of the relevant authorities may also be required in order to secure authorisation to connection to the grid.

[1]

Country	Standard
EU	Harmonised document - HD 60364-7-712 (European implementation of the IEC standard)

The device must only be operated with PV arrays (PV modules and cabling) of protection class II, in accordance with IEC 61730, application class A.

The name plate must be permanently attached to the product.

Any other or additional use is not considered proper or intended use and can lead to an annulment of the product guarantee. This includes:

- Use of a distribution system that is not described (grid type)
- Use of sources other than PV-strings
- Mobile use
- Use in rooms where there is a risk of explosion
- Use in direct sunlight, rain or a storm or other harsh environmental conditions
- Outdoor use in environmental conditions that exceed the limits stated in the technical specifications >Environmental data
- Operation outside the specification intended by the manufacturer
- Overvoltage on the DC connection of over 1100 V
- Modifying the device
- Standalone mode

2.2 Protection features

The following monitoring and protection functions are built-in:

- RCMU (Residual Current Monitoring Unit)
- Overvoltage conductor / varistor to protect the power semiconductors from high-energy transients on the grid and generator sides
- Device temperature monitoring system
- EMC filter to protect the inverter from high-frequency grid interference
- Grid-side varistors grounded to earth to protect the product against burst and surge pulses
- Anti-islanding detection according to the current standards.
- Isolation detection / residual current monitoring and disconnection function to detect isolation faults.

NOTE

If the device is connected, the overvoltage conductors / varistors contained in the device have an impact on the electrical system insulation resistance test as per HD 60364-6 / IEC 60364-6 Low-voltage installations-Part 6: Verification.

IEC 60364-6 6.4.3.3 describes two options for this case. The first option is to disconnect devices with an overvoltage conductor or, if this is not practicable, then the test voltage can be reduced to 250V

3 Description of the device

3.1 Mode of operation

The device converts the DC voltage generated by the PV-modules into AC voltage and feeds this into the power grid. The starting procedure begins when there is sufficient sunlight and a specific minimum voltage is present in the device. The feed-in process begins once the PV generator has passed the insulation test and the grid parameters are within the requirements imposed by the grid operator for a specific monitoring time. If, as it gets dark, the voltage drops below the minimum voltage value, feed-in mode ends and the device switches off.

3.2 System layout

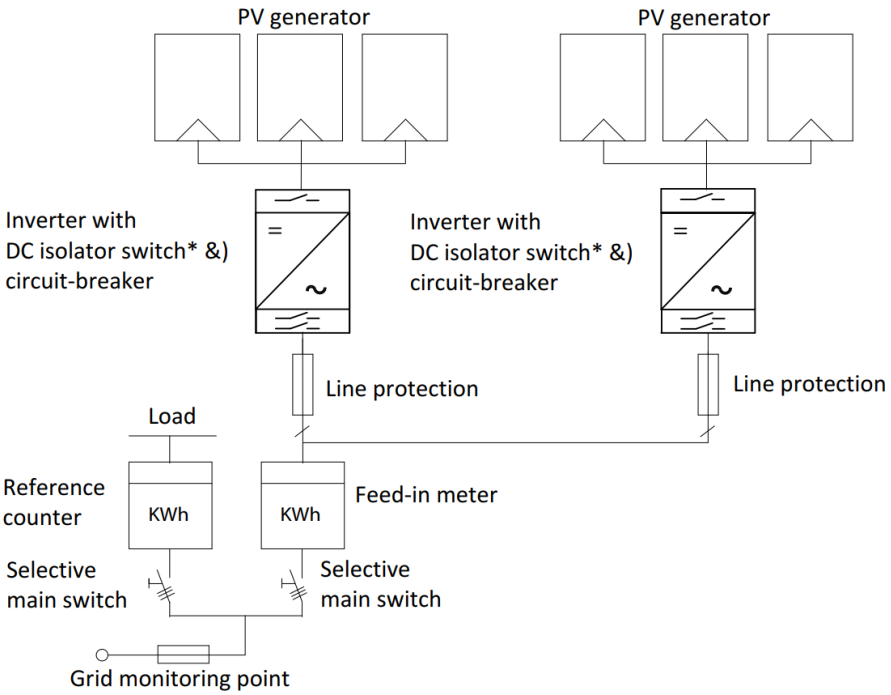

Fig. 2: Circuit diagram of a system with two inverters

Key	Definition / information on the connection
PV generator	The PV generator converts the radiant energy of sunlight into electrical energy.
Inverter with circuit-breaker	The PV generator is connected to the device's DC connection.
Line protection	The circuit breaker is an overcurrent protection device.
Feed-in meter	The feed-in meter is to be specified and installed by the power supply company. Some power supply companies also allow the installation of your own calibrated meters.
Selective main switch	The selective main switch is to be specified by the power supply company.
Reference counter	The reference counter is to be specified and installed by the power supply company. This measures the amount of energy drawn.
DC integrated isolator switch	Use the DC integrated isolator switch to disconnect the device from the PV generator.

4 Technical data

4.1 Electrical Data

KACO blueplanet	3.0 NX3 M2	5.0 NX3 M2	8.0 NX3 M2	10.0 NX3 M2	15.0 NX3 M2	20.0 NX3 M2
DC Input levels						
Recommended generator power range	4.5 kW	7.5 kW	12.0 kW	15.0kW	22.5 kW	30.0 kW
MPP range@Pnom	270V-850V		400V-850V			
Working range	150-1000 V					
Rated voltage	630 V					
Starting voltage	180 V					
Open circuit voltage	1100 V					
Max. input current (PV1/PV2) [2]	16A / 16A	16 A/16 A	20A /16A	20A/16A	32A /20A	32A/32A
Number of strings	1/1	1/1	1/1	1/1	2/1	2/2
Number of MPP controls	2					
Max. short-circuit current (I_{SC} max.) [2] (PV1/PV2)	25A/25A	25A/25A	30A/25A	30A/25A	48A/30A	48A/48A
Input source feedback current	0 A					
Polarity safeguard	yes					
String fuse	no					
DC overvoltage protection	Type II					
KACO blueplanet	3.0 NX3 M2	5.0 NX3 M2	8.0 NX3 M2	10.0 NX3 M2	15.0 NX3 M2	20.0 NX3 M2
AC Output levels						
Nominal power	3 kVA	5 kVA	8 kVA	10 kVA	15 kVA	20kVA
Rated voltage	220 / 380 V [3/N/PE] / 230 / 400 V [3/N/PE] /240 / 415 V [3/N/PE]					
Voltage range: continuous operation	160V - 300V					
Rated current	3*4.6 A [@220V] / 3*4.4 A [@230V] / 3*4.2 A [@240V]	3*7.6 A [@220V] / 3*7.3 A [@230V] / 3*7 A [@240V] /	3*12.2 A [@220V] / 3*11.6 A [@230V] / 3*11.1 A [@240V] /	3*15.2 A [@220V] / 3*14.5 A [@230V] / 3*13.9 A [@240V]	3*22.8 A [@220V] / 3*21.8 A [@230V] / 3*20.9 A [@240V]	3*30.3 A [@220V] / 3*29 A [@230V] / 3*27.8 A [@240V]
Max. continuous current	4.8 A	8.0 A	12.8 A	16.0 A	24.0 A	31.9 A
Contribution to peak short-circuit ip	20,0 A	20,0 A	35,0 A	35,0 A	47,0 A	65,0 A
Initial short-circuit alternating current (Ik" first single period effective value)	4,8 A	8,0 A	12,8 A	16,0 A	24,0 A	31,9 A
Short circuit current continuous (Ik max output fault current)	4,8 A	8,0 A	12,8 A	16,0 A	24,0 A	31,9 A
Inrush current	<20% of nominal AC current for a maximum of 20ms					
Rated frequency	50/60 Hz					
Frequency range	45 – 65 Hz					
Reactive power	0 - 60% Snom					
cos phi	0.8 $_{inductive}$.... 0.8 $_{capacitive}$					
Number of feed-in phases	3					
Distortion factor (THD)	<3%					
Max. voltage range (up to 100 s)	300 V					
AC overvoltage protection	Type III					

[2] The "Max. input current" is the maximal theoretical value during operation at full power and minimal MPP voltage. The inverter will clip to the maximum AC power output.

The "Max. short-circuit current ($I_{SCmax.}$)" defines together with open circuit voltage (U_{OCmax}) the characteristic of the connected PV generator. This is the relevant value for string sizing and is the absolute maximal limit for inverter protection. The connected PV-Generator must be designed, that the max short circuit current is below or equal to I_{SCmax} of the inverter under all foreseeable conditions. In no condition the design may result in a greater short circuit current than I_{SCmax} of the inverter.

4.2 General Data

KACO blueplanet	3.0 NX3 M2	5.0 NX3 M2	8.0 NX3 M2	10.0 NX3 M2	15.0 NX3 M2	20.0 NX3 M2
Max. efficiency	97,28%	97,47%	97,69%	97,68%	97,75%	97,78%
European efficiency	95,82%	96,45%	97,03%	97,14%	97,33%	97,44%
Self consumption: Standby	5 W					
Feed-in from	60 W					
Transformer unit	no					
Protection class / over voltage category	I / III (AC) II (DC)					
Grid monitoring	Country-specific					
Distribution system	TN-C-System, TN-C-S-System, TN-S-System, TT-System					
Display	LEDs					
Controls	no					
Menu languages	DE, EN					
Interfaces	Communication device / RS485					
Communication	WLAN, SunSpec Modbus TCP-IP / SunSpec Modbus RTU, KACO Legacy Protocol					
Radio technology	WLAN 802.11 b / g / n					
Radio spectrum	2412MHz - 2472MHz					
Antenna Gain	2dBi					
Potential-free relay	no					
DC isolator switch	yes					
AC isolator switch	no					
Cooling	natural				Fan cooling	
Number of fans	no				1	
Noise emission	< 40 dB(A)				< 45 dB(A)	
Housing material	Aluminium					
HxWxD	503 mm * 435 mm * 183 mm					
Weight	16 kg				17 kg	18kg
Certifications	Overview: see homepage / download area					

4.3 Environmental Data

KACO blueplanet	3.0 NX3 M2	5.0 NX3 M2	8.0 NX3 M2	10.0 NX3 M2	15.0 NX3 M2	20.0 NX3 M2
Installation height	3000m					
Installation distance from coast	3000m					
Ambient temperature	-25 °C …+60 °C					
Power derating from	40 °C					
Protection rating (KACO installation location)	IP65					
Humidity range (non-condensing) [%]	100%					

4.4 Accessories

Accessories articles	KACO order no.
Eastron SDM630	3015600

5 Transportation and Delivery

Every product leaves our factory in perfect electrical and mechanical condition. Special packaging ensures that the devices are transported safely. The shipping company is responsible for any transport damage that occurs.

5.1 Scope of delivery

Object	Description	Quantity
A	Inverter	1 piece
B	Wall mounting bracket	1 piece
C	Mounting accessory kit Wall anchors, hexagon bolts (3×) M5×14 mm screw (2×)	1 set
D	DC connector (phoenix sunclix)	2 pairs (3-10KW); 3 Pairs (15kW); 4 pairs (20KW)
E	AC Plug connector	1 piece
F	Communication device	1 piece
G	Documentation	1 set
H	RS485 terminal	2 pcs

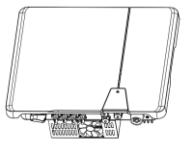	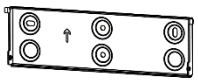		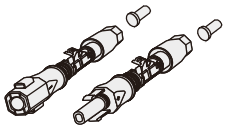	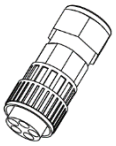
A	B	C	D	E
	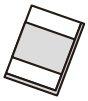	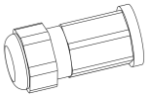		
F	G	H		

Check the equipment included

1 Inspect the device thoroughly.
2 Immediately notify the shipping company in case of the following:
- Damage to the packaging that indicates that the device may have been damaged.
- Obvious damage to the device.

3 Send a damage report to the shipping company immediately.
4 The damage report must be received by the shipping company in writing within six days following receipt of the device. We will be glad to help you if necessary.

5.2 transporting the device

⚠ CAUTION

Hazard due to impact; risk of breakage to the device!

› Pack the device securely for transport.
› Transport the device using the intended carrying handles of the packaging box.
› Do not expose the device to any shocks.

5.3 Installation tool

The codes given in the table below are used in all usage instructions for assembly/installation/maintenance and disassembly for the tools and tightening torques being used.

Code (s)	Shape of the connector
W	External hexagon
T	Torx
S	Slotted
P	Phillips

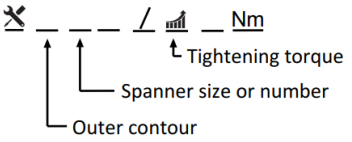

Fig. 3: Form pattern

6 Assembly and preparation

6.1 Choosing the installation location

DANGER

Risk of fatal injury due to fire or explosions!

Fire caused by flammable or explosive materials in the vicinity of the device can lead to serious injuries.

› Do not mount the inverter in potentially explosive atmospheres or in the vicinity of highly flammable materials

CAUTION

Property damage due to gases that have an abrasive effect on surfaces when they come into contact with ambient humidity caused by weather conditions.

The device housing can be seriously damaged due to gases in combination with air humidity resulting from weather conditions (e.g. ammonia, sulphur).

› If the device is exposed to gases, the installation must be carried out at observable locations.

› Perform regular visual inspections.

› Immediately remove any moisture from the housing.

› Ensure adequate ventilation at the installation location.

› Immediately remove dirt, especially on vents.

› Failure to observe these warnings may lead to device damage which is not covered by the manufacturer warranty.

NOTE

Access by maintenance personnel for service

Any additional costs arising from unfavourable structural or mounting conditions shall be billed to the customer.

Installation space

As dry as possible, climate-controlled, the waste heat must be dissipated away from the device
Unobstructed air circulation
When installing the device in a control cabinet, provide forced ventilation for sufficient heat dissipation
Close to the ground, accessible from the front and sides without requiring additional resources
Protected on all sides against direct weather exposure and sunlight (thermal heating) in outdoor areas.
Implementation where necessary via constructional measures, e.g. wind breaks
Ensure that the inverter is installed out of the reach of children.
To ensure best operating status and prolonged service life, the mounting ambient temperature of the inverter should be ≤40°C.
To avoid direct sunlight, rain, snow, ponding on the inverter, it is suggested to mount the inverter in places with a top protective roof. Do not completely cover the top of the inverter.
The mounting condition must be suitable for the weight and size of the inverter. The inverter is suitable to be mounted on solid wall that is vertical or tilted backwards (Max. 15°). It is not recommended to install the inverter on wall made of plasterboards or similar materials. The inverter may make noise when working.

Installation surface

Must have adequate load-bearing capacity
Must be accessible for installation and maintenance
Must be made out of heat-resistant material (up to 90 °C)
Must be flame resistant
Minimum clearances to be observed during installation [see figure 9]

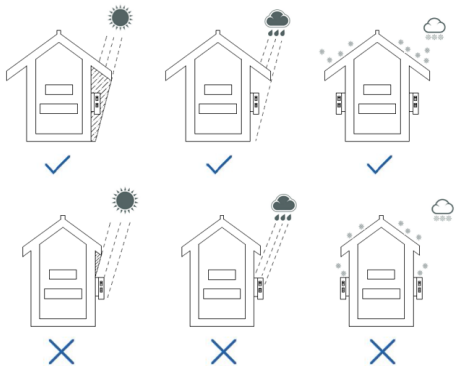

Fig. 4: Device for outdoor installation

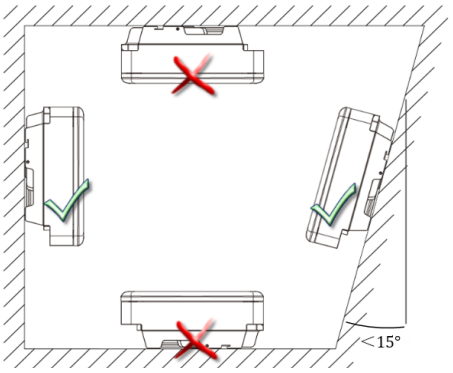

Fig. 5: Permissible installation location

6.2 Unpacking the device

⚠ CAUTION

Risk of injury caused by excessive physical strain

Lifting the device, for transport, relocation and assembly, can result in injuries (e.g. back injuries).

› Only lift the device using the grip recesses provided

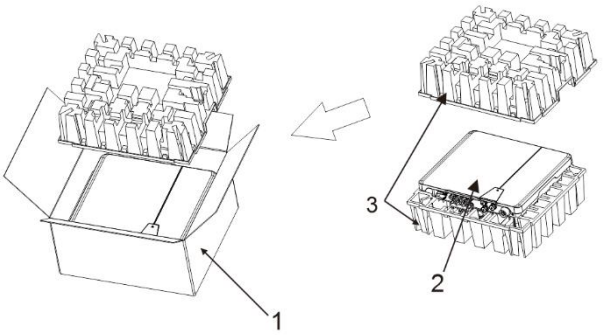

Fig. 6: Unpacking the device

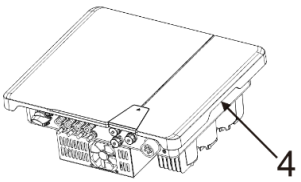

Fig. 7: Lift the device

Key			
1	Carton	3	Protective packaging
2	Device	3	Lifting position

↻ The device is transported to the installation location.

1 Loosen packaging tape from cardboard box.

2 Open carton at the front.

3 Remove installation material and documentation.

4 Pull up top protective packaging to remove.

5 Remove device from the packaging to grab the cover together with the edge of housing.

6 Place the protective packaging back into the carton.

7 Lift the device at the intended positions.

» Continue installing the mount

6.3 Fastening the mount

⚠ CAUTION

Hazard when using unsuitable fixing materials!

If unsuitable fixing materials are used, the device could fall and persons in front of the device may be seriously injured.

› Use only fixing materials that are suitable for the mounting base. The fastening materials supplied are only suitable for masonry and concrete.

› Only install the device in an upright position.

NOTE

Power reduction due to heat accumulation!

If the recommended minimum clearances are not observed, the device may go into power regulation mode due to insufficient ventilation and the resulting heat build-up.

› Observe minimum clearances and provide for sufficient heat dissipation.

› All objects on the device housing must be removed during operation.

› Ensure that no foreign bodies prevent heat dissipation following device installation.

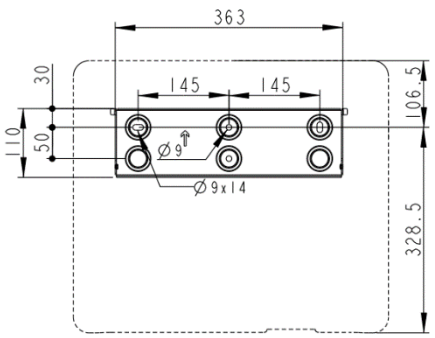

Fig. 8: Drilling holes for wall mounting

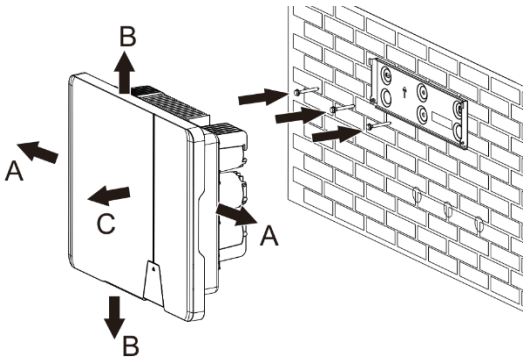

Fig. 9: Mounting wall bracket

Key

1	Drilling three holes [Ø 10mm with depth 70mm]	5	Screw for securing purposes
2	Insert screws and anchors	A	Minimum clearance: 300 mm
3	Take out the wall bracket	B	Minimum clearance: 500 mm
4	Mounting the wall bracket	C	Minimum clearance: 500 mm

↻ Cardboard packaging with mount and mounting kit removed from the packaging and opened.

1 Mark the mounting position on the wall surface according to the position of the mount plate by drawing three marks.

NOTE: The arrow must be pointing upwards and be visible when the mount is fastened to the wall. And make sure that the mount is oriented correctly.

2 Mark the positions of the drill holes using the slot in the mount..

NOTE: The minimum clearances between two devices, or the device and the ceiling or floor must be considered.

3 Fix the mount to the wall using suitable mounting fixtures from the mounting kit [W-10].

NOTE: Make sure that the mount is oriented correctly.

» Proceed with the installation of the device

6.4 Installing and securing the device

⚠ CAUTION

Risk of injury from improper lifting and transport.

If the device is lifted improperly, it can tilt and result in a fall.

› Always lift the device vertically using the grip recesses provided.

› Use a climbing aid for the chosen installation height.

› Wear protective gloves and safety shoes when lifting and lowering the device.

Lifting and installing the device

↻ The mount has been installed.

1 Lift the device using the grip recesses. Pay attention the device's centre of gravity!

2 Fit the device onto the mounting bracket. Check both sides of the heat sink to ensure that it is securely in place [see figure 10].

3 Insert the screw provided into the lug of the mount and secure the device to prevent it from being lifted off. [P / 2.5 Nm]

NOTE: Alternatively, at this point, the screw described above can be replaced by a special screw as anti-theft protection.

» Device is installed. Proceed with the electrical installation

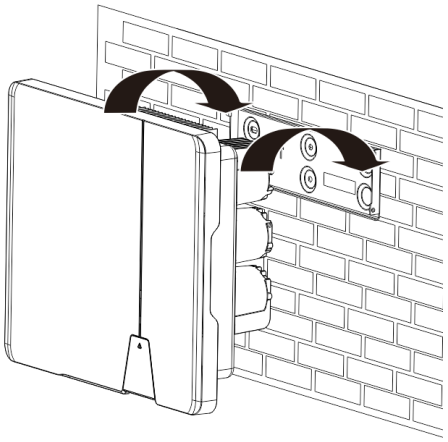

Fig. 10: Mounting the inverter to the wall bracket

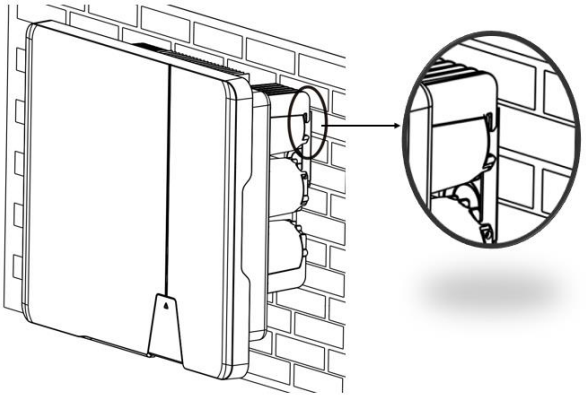

Fig. 11: Check the device is securely in place

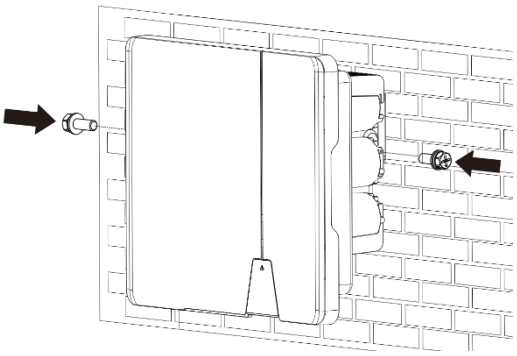

Fig. 12: Fixing the inverter

⚠ CAUTION

Property damage as a result of condensation

During pre-assembly of the devices, moisture can penetrate into the interior via the DC plug connectors and the dust-protected threaded connections. The resulting condensate can cause damage to the device during installation and start-up.

Keep the device closed during pre-assembly and do not open the connection area until you perform installation.

› Seal off any plug-in connections and screw fittings using sealing covers.

› Prior to installation, check the inner area for condensation and if necessary, allow it to dry sufficiently before installation.

› Immediately remove any moisture from the housing.

7 Installation

7.1 General information

DANGER

Lethal voltages are still present in the connections and cables of the device even after the device has been switched off and disconnected!

Severe injuries or death may occur if the cables and/or terminals/busbars in the device are touched.

› Do not open the product.

› The device must be mounted in a fixed position before being connected electrically.

› Comply with all safety regulations and current technical connection specifications of the responsible power supply company.

› Switch off the grid voltage by turning off the external circuit breakers.

› Check that all AC and DC cables are completely free of current using a clip-on ammeter.

› Do not touch the cables and/or terminals/busbars when switching the device on and off.

7.2 Surveying the connection area

The connection for the AC supply is located on the enclosure in the lower right area. The DC input source is connected to the DC plugs and DC sockets on the base plate.

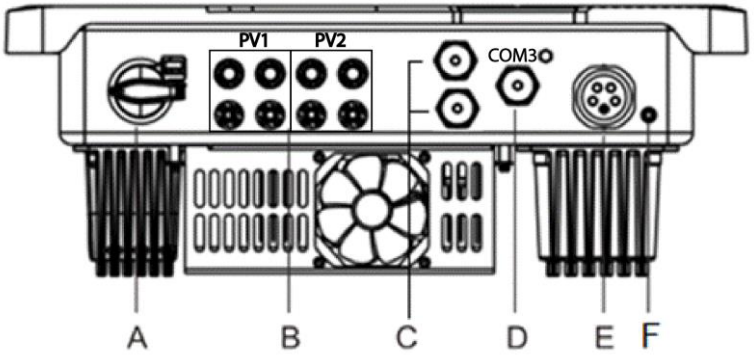

Fig. 13: Surveying the connection area

A	DC integrated isolator switch	D	Communication device connection
B	DC connector for PV generator	E	AC connection socket
C	RS485 connection	F	Housing grounding

7.3 Making the electrical connection

NOTE

Select conductor cross-section, safety type and safety value in accordance with the following basic conditions:

Country-specific installation standards; power rating of the device; cable length; type of cable installation; local temperature.

7.3.1 Requirement for supply lines and fuse

DC-side	
Max. external diameter	5 – 8 mm
Max. cable cross-section (with wire sleeves)	2.5 - 6 mm² (DC plug connector)
Recommended cable type	Solar cable

AC-side	
Max. conductor cross-section	4 - 16 mm²
Max. external diameter (with wire sleeves)	18 - 21 mm
Length of insulation to be stripped off	12 mm
Connection type	Vaconn AC connector
Fuse protection for installation provided by customer	Max 32 A at 16 mm²
Tightening torque	2.0 Nm
Communication	
Recommended RS485 bus cable	Li2YCYv (twisted pair) black for laying cable outside and in the ground, 2 x 2 x 0.5 mm²
	Li2YCY (twisted pair) grey for dry and damp indoor spaces, 2 x 2 x 0.5 mm²

7.4 Connecting the device to the power grid

7.4.1 Configuring the AC connection

↻ You have completed assembly.

1 Slide the cable fitting over the cable and the housing and seal over the cable.

2 Remove the insulation from the cable. [sl. 75 mm]

3 Shorten the wires N, L by 2 mm than PE conductor and strip the wires N, L, PE by 13 mm.

4 Flexible wires must be fitted with wire sleeves in accordance with DIN 46228.

5 Insert wires into the contacts in accordance with the markings on the contact carrier.

6 Tighten screws on contact carrier. [TX_25 / 2.0 Nm]

7 Press contact carriers into the housing with an audible "click".

8 Secure the housing and tighten the cable screw fitting. [W_40 / 5.0 Nm]

» Make the electrical connections.

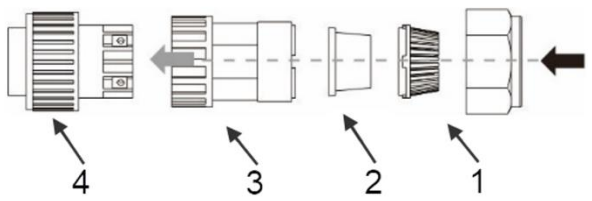

Fig. 14: AC connection plug

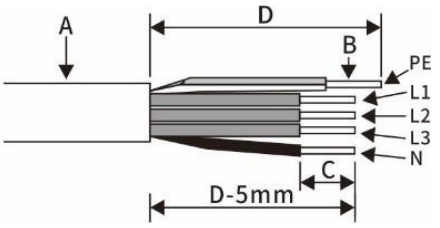

Fig. 15: Prepare the wires

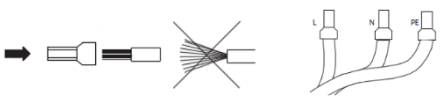

Fig. 16: Crimp ferrule to the contact

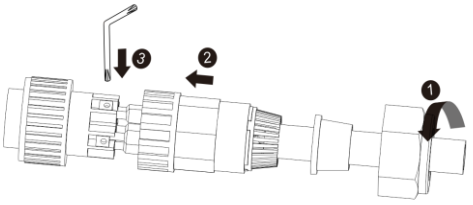

Fig. 17: Fitting wires at contact carrier

Key			
1	Cable fitting	A	External diameter (ϕ 18 to 21 mm)
2	Seal	B	Conductor cross-section (4 to 16 mm²)
3	Housing	C	Stripping length of the insulated conductors (approx. 12 mm)
4	Contact carrier	D	Stripping length of the outer sheath of AC cable (approx. 75 mm)

7.4.2 Make the AC connection

↻ AC connection plug configured correctly.

1 Insert the AC connection plug into the device connector on the device.

⇨ **NOTE: The AC connection is secure when an audible click is heard.**

2 Lay the cables correctly and in accordance with the following rules:
- Lay the cables around the device with a minimum clearance of 20 cm
- Never lay cables over semiconductors (cooling bodies).
- Excessive bending force may negatively impact the protection rating. Lay the cables with a bending radius of at least 4 times the cable diameter.

» The device is connected to the power grid

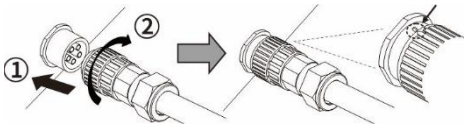

Fig. 18: Engage the AC connector with the device connector

NOTE

An AC-side disconnection device must be provided during the final installation stage. This disconnector mechanism must be installed so that it can be accessed at any time without obstruction.

NOTE

If a residual current circuit breaker is necessary due to the installation specification, a type A residual current circuit breaker must be used.

For questions regarding the appropriate type, please contact the installer or our KACO new energy customer service.

NOTE

When the line resistance is high, i.e. long cables on the grid side, the voltage at the grid terminals of the device will increase in feed-in mode. If the voltage exceeds the country-specific grid overvoltage limit value, the device switches off.

Ensure that the cable cross-sections are sufficiently large or that the cable lengths are sufficiently short.

7.5 Connect PV generator to device

7.5.1 Configuring the DC plug connector

DANGER

Risk of fatal injury due to electric shock!

Coming into contact with live connections can cause serious injury or death. When there is sunlight present on the PV generator, there is DC voltage on the open ends of the DC cables.

› Make sure PV modules have good insulation against ground.

› On the coldest day based on statistical records, the Max. open-circuit voltage of the PV modules must not exceed the Max. input voltage of the inverter.

› Check the polarity of DC cables.

› Ensure there is no DC voltage present.

› Do not disconnect DC connectors under load.

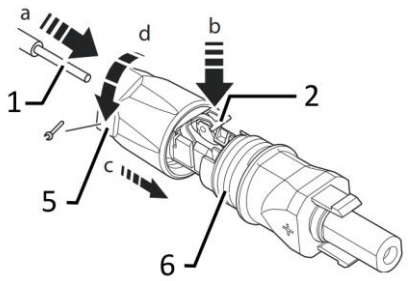

Fig. 19: Insert wires

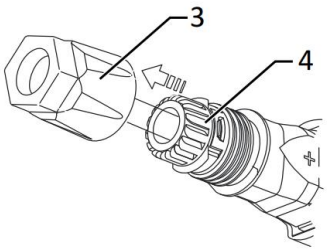

Fig. 20: Slide insert into sleeve

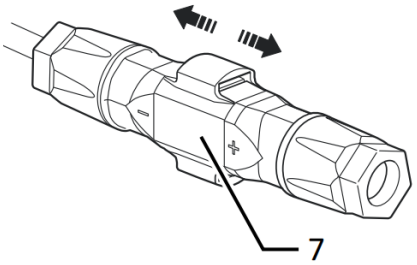

Fig. 21: Check fastening

Key			
1	Wire for DC connection	5	Cable fitting
2	Spring	6	Contact plug
3	Insert	7	Coupling
4	Sleeve		

↻ You have completed the assembly

↻ **NOTE: Before proceeding with the isolation ensure that you do not cut any individual wires.**

1 Insert isolated wires with twisted ends carefully up to the connection.

NOTE: Wire ends must be visible in the spring.

2 Close the spring so that the spring latches and slide insert into sleeve.

3 Secure and tighten the cover on the cable fitting [W_15/1.8 Nm].

4 Join insert with contact plug.

5 Check latch by lightly pulling on the coupling.

» Make the electrical connections

NOTE

The permissible bending radius of at least 4x the cable diameter should be observed during installation.

Excessive bending force may negatively impact the protection rating.

› All mechanical loads must be absorbed in front of the plug connection.

› Rigid adaptations are not permitted on DC plug connectors

7.5.2 Checking the PV generator for a ground fault

DANGER

Risk of fatal injury due to electric shock!

Severe injury or death will result if the live connections are touched. When there is sunlight present on the PV generator, there is DC voltage on the open ends of the DC cables.

› Only touch the PV generator cables on the insulation. Do not touch the exposed ends of the cables.

› Avoid short circuits.

› Do not connect any strings with a ground fault to the device.

NOTE

The threshold value above which insulation monitoring reports an error can be set on the mobile device under Other protection settings - Minimum insulation resistance.

Ensure that there is no ground fault

1 Measure the DC voltage between the protective earth (PE) and the positive cable of the PV generator.

2 Measure the DC voltage between the protective earth (PE) and the negative cable of the PV generator.

⇨ If stable voltages can be measured, there is a ground fault in the DC generator or its wiring. The ratio between the measured voltages gives an indication as to the location of this fault.

3 Rectify any faults before taking further measurements.

4 Measure the electrical resistance between the protective earth (PE) and the positive cable of the PV generator.

5 Measure the electrical resistance between the protective earth (PE) and the negative cable of the PV generator.

⇨ In addition, ensure that the PV generator has a total insulation resistance of more than 2.0 MOhm, since the device will not feed in if the insulation resistance is too low.

6 Rectify any faults before connecting the DC generator.

7.5.3 Recommended standard connection

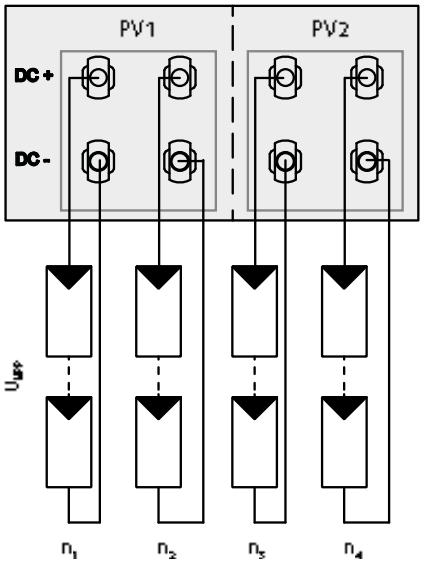

Possible wiring
Two DC strings for each MPP tracker
The MPP voltages of the two DC strings can be different. They are supplied by separate, independently operating MPP trackers (MPP trackers A and B)

Number of modules per string:
P_{max}: per string < 0.6 * max. recommended PV generator power
MPP tracker A+B together < max. recommended PV generator power
I_{max}: Depending on PV generator
The input current per MPP tracker must not be exceed 40 A

Fig. 22: Recommended standard connection

7.5.4 Connection in parallel operation

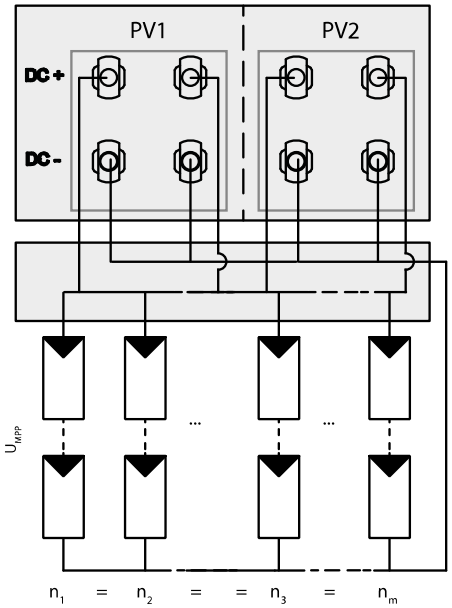

Possible wiring
Both MPPTs must be connected individually to the generator junction box.
The DC inputs can also be connected in parallel. In this case, only lines with the same MPP voltage may be connected in parallel(U_{n1}=U_{n2}=U_{nx})

Number of modules per string:
When using the MPP Trackers in parallel mode, the maximum allowed power is 1,1x rated power. Also the maximum MPPT current is limited by the lowest value of all MPPTs. For example, if the 15kW inverter is used in parallel mode, the maximum allowed power is 1,1x 15kW = 16,5kW and each MPPT current is limited to 20A (since one MPPT is rated for 32A and the other is rated for 20A).

Fig. 23: Recommended parallel mode connection at blueplanet 20.0NX3

Open the incidental "KACO NX Setup" APP for these devices.

1. Select <Select inverter> under <Communication device> menu and view the <Enable/disable functions> via the <Settings for> menu.
2. Activate function <MPPT parallel operation>.

It is necessary to install an external string fuse.

» The parallel mode is activated.

NOTE

Additional Information

For further information, please refer to the associated “Installation and use of the APP”.

7.5.5 Designing the PV generator

CAUTION

Damage to components due to faulty configuration!

In the expected temperature range of the PV generator, the values for the no-load-voltage and the short circuit current must never exceed the values for U_{dcmax} and I_{scmax} in accordance with the technical data.

› Observe limit values in accordance with the technical data.

NOTE

Type and configuration of the PV modules

Connected PV modules must be dimensioned for the DC system voltage in accordance with IEC 61730 Class A, but at least for the value of the AC grid voltage.

NOTE

Sizing of the PV generator

The device is designed with a reserve of DC short-circuit current withstand capability. This allows oversizing of the connected PV generator. The absolute limit for the PV generator is the value of the maximum short circuit current (Isc max) and maximum open circuit voltage (Uoc max).

7.5.6 Connecting the PV generator

DANGER

Risk of fatal injury due to electric shock!

Severe injury or death will result if the live connections are touched. When there is sunlight present on the PV generator, there is DC voltage on the open ends of the DC cables.

› Only touch the PV generator cables on the insulation. Do not touch the exposed ends of the cables.

› Avoid short circuits.

› Do not connect any strings with a ground fault to the device.

CAUTION

Damage to the PV generator in case of faulty configuration of the DC connector

A faulty configuration of the DC connector (polarity +/-) causes equipment damage in the DC connection if it is connected permanently.

› Please check polarity (+/-) of the DC connector before connecting the DC generator.

› Before using the solar modules, check the vendor’s calculated voltage values against those actually measured. The DC voltage of the PV system must not exceed the maximum no-load voltage at any time.

Connecting the PV generator

↻ DC plug connector has to configured and PV generator checked to ensure there is no ground fault.

NOTE: Note the different current-carrying capacity of PV1 and PV2 depending on the power class.
See technical data - Chapter 4. on Page 17 PV1 = (1); PV2 = (2)

1 Plug the DC connectors in pairs to the DC positive and DC negative connectors.

» The device is connected to the PV generator.

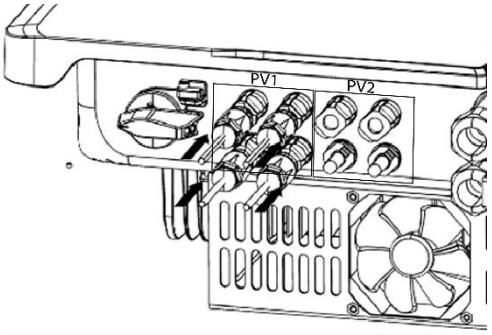

Closing unused DC plugs

↻ All existing strings are connected to PV inverter.

NOTE: Meet the requirements of protection class IP65 by closing the unused plug connectors with enclosed protective caps.

1 Press down the clamping bracket and push the swivel nut up to the thread. Insert the sealing plug into the DC plug connector and tighten the swivel nut.

2 Finally insert DC plug connectors with sealing plugs into corresponding DC input connectors on the inverter.

» Unused DC plugs are closed.

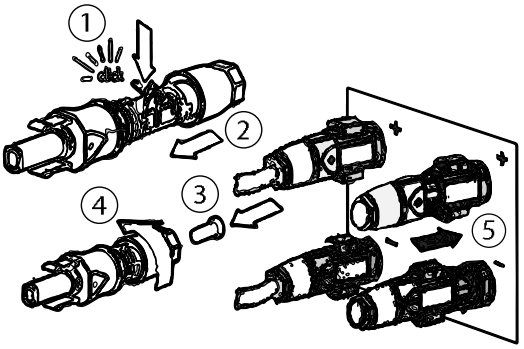

Fig. 24: Insert the DC plug connectors and closed unused plugs

7.6 Creating equipotential bonding

NOTE

Depending on the local installation specifications, it may be necessary to earth the device with a second ground connection. To this end, the threaded bolt on the underside of the device can be used

↻ The device has been installed on the mount.

1 Insert the grounding conductor into the suitable terminal lug and crimp the contact.

2 Insert Align the terminal lug with the grounding conductor on the screw.

3 Tighten it firmly into the housing [P_2/ 2.5Nm].

» The housing is included in the equipotential bonding

Key			
1	M5 terminal lug	3	M5 screw
2	Grounding protective conductor		

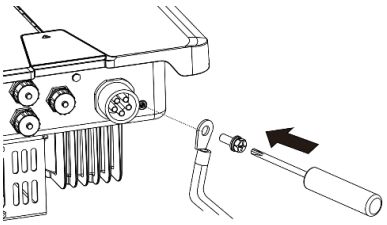

Fig. 25: connect the grounding

7.7 Connecting the interfaces

7.7.1 Communication device connection

NOTE

Damage to the inverter due to electrostatic discharge

Internal components of the inverter can be irreparably damaged by electrostatic discharge.

› Ground yourself before touching any component.

NOTE

Damage to the communication device due to turn the stick body

When the communication device fastens to the inverter, the nut on the stick should be turned. The communication device be damaged if you turn the stick body.

› Do not turn the communication device itself to fastening to the inverter.

↻ The device has been installed on the mount.

1 Remove the cap on the COM3 connector.

2 Insert the communication device into the existing connection and screw it tightly into the connection using the nut on the module.

NOTE: Do not turn the communication device -Module itself to fastening to the inverter.

3 Ensure the communication device is securely connected and the label on the module can be seen.

» The communication device is connected to the device.

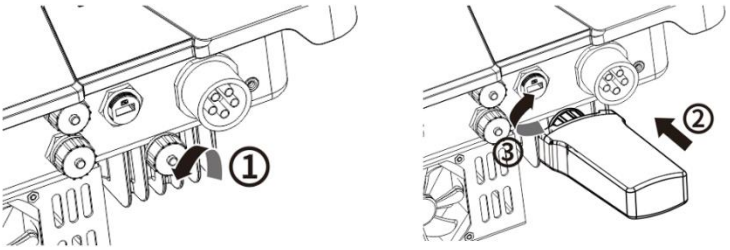

Fig. 26: Connect the communication device

7.7.2 RS485 cable connection

NOTE

Damage to the inverter due to electrostatic discharge

Internal components of the inverter can be irreparably damaged by electrostatic discharge.

› Ground yourself before touching any component.

NOTE

A network cable according chapter 7.3.1 on page 14 is required for connection to the RJ45 socket. And the good UV resistance of the network cable is also required for outdoor use.

The RS485 port can support the communication with the maximum installation length (over all inverters) of 1000m. The single and control port shall be measured according to EMC requirements EN 62920 if the length of cable connected to the signal and control port is more than 30m according to the standard.

↻ The device has been installed on the mount.

1 Strip the wire as shown in the figure 27 and crimp the copper wire to the appropriate terminal (according to DIN 46228-4, provided by the customer).

2 Unscrew the communication port cover cap in the following arrow sequence (see fig. 29, note sequence and directions of arrows) and insert the network cable into the RS485 communication client attached.

3 Insert the network cable into the corresponding communication terminal of the machine according to the arrow sequence, tighten the thread sleeve, then tighten the forcing nut at the tail.

» The RS485 Cable is connected to the device.

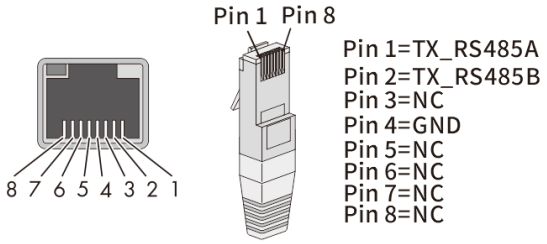

Fig. 27: cable pin assignment

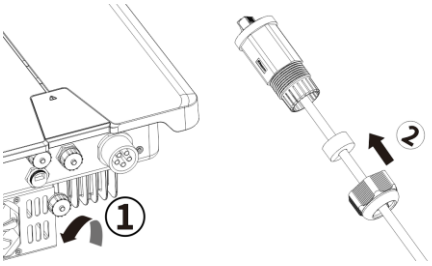

Fig. 28: insert the network cab

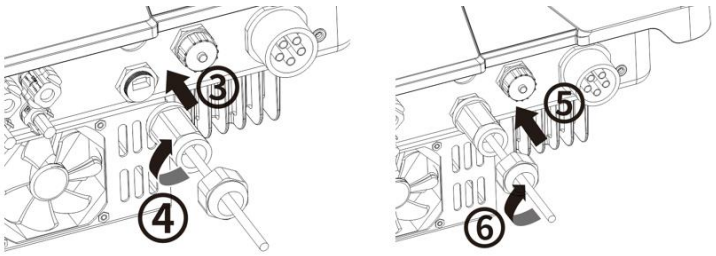

Fig. 29: Connect the network cable

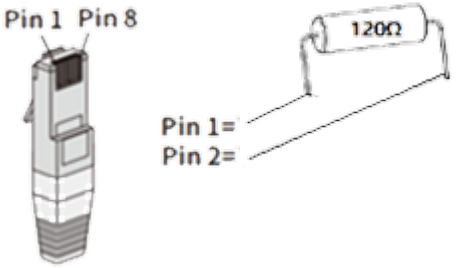

Fig. 30: Configuration RJ45 plug with 120 Ω

NOTE

When using the RS485 bus system, you must assign a unique IP address to each bus participant (inverter, sensor).

> 5 devices or > 100 m - Terminate the **first** and **last** device of the communication link (device/smart meter) by configured RJ45 connector with integrated 120 Ω terminating resistor (See Fig. 30).
Follow the connection diagrams in the associated "Application note - Installation and use of the APP".

↻ RS485 communication contains more than 5 devices or is over 100m long - resistor required.

1. Insert RJ45 plug with 120 Ω terminating resistor into the free communication port on the fist and last device.

» RS485 connection connected. Lay signal power properly.

7.8 Connecting Smart-Meter for dynamical feed-in

If you want to implement the function dynamically, you need to install the Smart-Meter. The communication device is only compatible with the **Eastron Smart-Meter** (**SDM630** – Article No. 3015600 is available via our customer service).

NOTE

The Smart-Meter must support the MODBUS protocol and communicates with baud rate 9600, parity “None”, Stop-Bits “1”

Ensure that individual wires at the terminal contact of the Smart-Meter are attached with the correct torque and cannot work loose. Attach protective cover if fitted.

NOTE

Damage to the inverter from electrostatic discharge

Components inside the device can be damaged beyond repair by electrostatic discharge.

› Ground yourself before touching a component.

NOTE

A network cable of category 5E or higher is required for connection to the RJ45 socket. A network cable with good resistance to UV radiation is also required for use outdoors.

The RS485 connection can support communication with a maximum installation length (across all inverters) of 1000 m. The individual and control connected must be measured in accordance with EMC requirements EN 62920 if the length of the cable attached at the signal and control connection is more than 30 m according to the standard.

↻ The device and the Smart-Meter have been firmly installed on a mounting bracket.

1. Unscrew the cover cap (Pos. 1) of the communication connection and route 8-pin network cable through the enclosed thread sleeve, forcing nut and seal (Pos. 2).
2. Strip the insulation from the network cable and crimp copper wire to the corresponding terminal (in accordance with DIN 46228-4, provided by the customer) of the standard network connector (RJ45) (see Fig. 32).
3. Insert network connector into the communication connection of the device (Pos. 3/5) and tighten the thread sleeve. Then tighten the forcing nut (Pos. 4/6).
4. Fit wire sleeve to the other end of the cable and connect to the contacts of the Smart-Meter. Screwdriver type: PH0, tightening torque: 0.7Nm (see Fig. 34.)

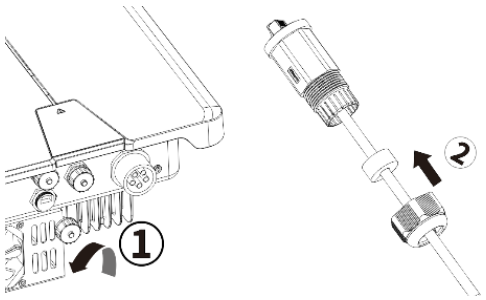

Fig. 31 Configure Network cable

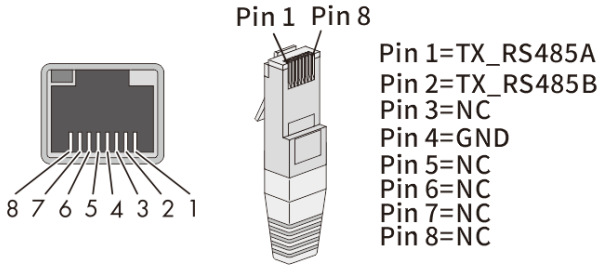

Fig. 32 Cable pin configuration

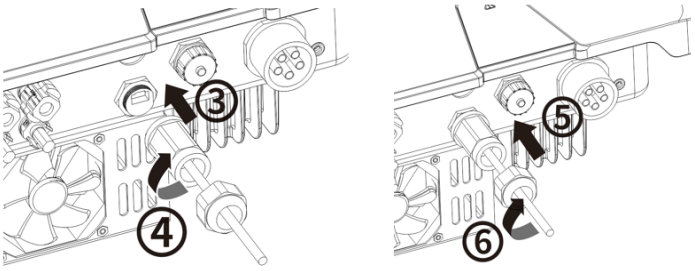

Fig. 33 Connect Network cable

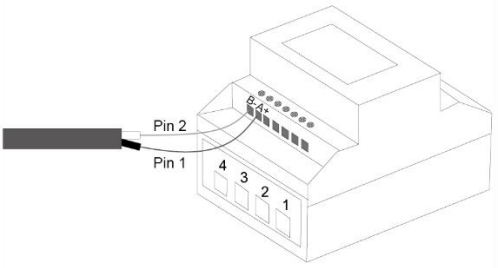

Fig. 34 Connect Network cable at Smart-Meter

8 Commissioning

8.1 Requirements

DANGER

Lethal voltages are still present in the connections and cables of the device even after the device has been switched off and disconnected!

Severe injuries or death may occur if the cables and/or terminals/busbars in the device are touched.

› The device is only permitted to be commissioned by a qualified professional.

› Unauthorised persons must be kept away from the device.

↻ The device has been mounted and electrically installed.

↻ The PV generator supplies a voltage above the configured start voltage.

1 Connect the grid voltage using the external circuit breakers.

2 Connect the PV generator using the DC isolator switch (0 > 1)

» The device begins operation.

» During initial start-up: Follow the instructions of the New Connection Wizard.

NOTE

For the initial commissioning of the device, the enclosed communication device must be plugged into the connection port COM 3. A mobile terminal with Wi-Fi interface is required for monitoring and parameterization. No serial number-dependent password is required.

The following functions are only possible via the associated app:

1. initial commissioning.
2. parameterisation
3. special parameters (e.g. P(f), P(U), Q(U))
4. reset to factory settings

8.2 Preconditions relating to standards

Attachment of safety label in accordance with UTE C15-712-1

The code of practice UTE C15-712-1 requires that, upon connection to the French low-voltage distribution network, a safety sticker showing a warning to isolate both power sources when working on the device must be attached to each device

☞ Attach the provided safety sticker to the outside of the device housing where it is clearly visible.

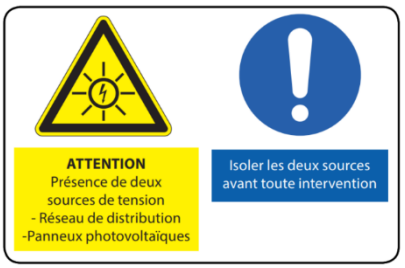

9 Configuration and operation

9.1 Initial start-up

When started for the first time, set the country data set appropriate for your country. Please visit website www.kaco-newenergy.com and download the document “Application note – Installation and use of the APP” detailed information.

9.2 Signal elements

There are status LEDs on the communication device and on the inverter housing that indicate the operating status. The LEDs can assume the following states:

	LED lights up		LED flashes		LED flash quickly

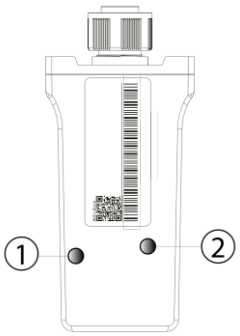

Fig. *35:* LED´s on the communication device

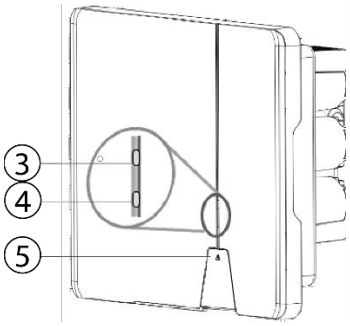

Fig. *36: LED´s at the device*

Pos.	Operation status on the communication device	LED	Description
1	Network Communication		**Note:** For the AP network configuration, you must be connected to the local WLAN network of the device to re-enter the router information. The password for the local WLAN network is the registration key that you will find on the type plate (see also: "Application note - Installation and use of the APP"). The blue "Network" LED flashes when the communication device is connected to the WLAN network.
			The blue "Network" LED lights up when the inverter is connected to the web portal. If the LED does not light up, check whether the network SSID and password are correct and whether the WLAN signal is strong enough.
2	Device communication		The green "Operation" LED lights up when the communication device establishes communication with the device. If it does not light up, there is a hardware defect. Contact our KACO service.
			The green LED "Operation" flashes if the connection fails due to invalid router information. Use the KACO NX Setup APP to perform the network configuration.
			The green "Operation" LED flashes quickly when the communication device is in network configuration mode. this deactivates the devices data acquisition.
Pos.	Operating status on the device	LED	Description
3	Standby self-test		The white "Operation" LED flashes when AC and DC voltage is present. The device performs a self-test. After flashing, the device is ready to feed in power.
3	Feed-in operation		The white "Operation" LED lights up when the device is feeding into the mains. In the event of a fault, the LED is off.
4	COM		The white "Communication" LED lights up during communication (data logger, smart meter, communication device) and during a

			firmware update via RS485. The LED does not light up if communication is interrupted or does not exist.
5	Malfunction	⚠	The red "Fault" LED lights up due to a fault and the feed-in to the grid is interrupted. The corresponding error code is displayed in the corresponding “KACO NX Setup” APP on your mobile device. If there is no fault, the LED goes out.
1-5	Offline	○	No LED is lit. There is no AC/DC supply to the device.

↻ Communication device is plugged into the device and firmly screwed in. Device is connected on the AC and DC sides.

Note: Observe the status of the LED during initialization, operation and fault messages. This can give you precise information about the current operating status of the device.

1 Check on the communication device that the blue LED lights up during the initialization process. If not, check the attachment again. Otherwise, replace communication device with others if necessary.

2 Check on the device that the white LED lights up in feed mode. If not, there is a fault in the device.

Note: In case of malfunctions, follow the instructions in the "Application note - Installation and use of the APP" in the chapter Troubleshooting.

» Continue with setting up the device monitoring.

9.3 Monitoring the device

User can monitor the device through the external communication device. The operating data of the device can transfer to the Cloud. And the user can view all the data on your mobile device with the “KACO NX Setup” APP.

Every device provides a communication device. If the same devices are installed at the same location together, the device can connect through the RS 485 cable and share one communication device. Please note that each communication device can only connect up to 5 devices.

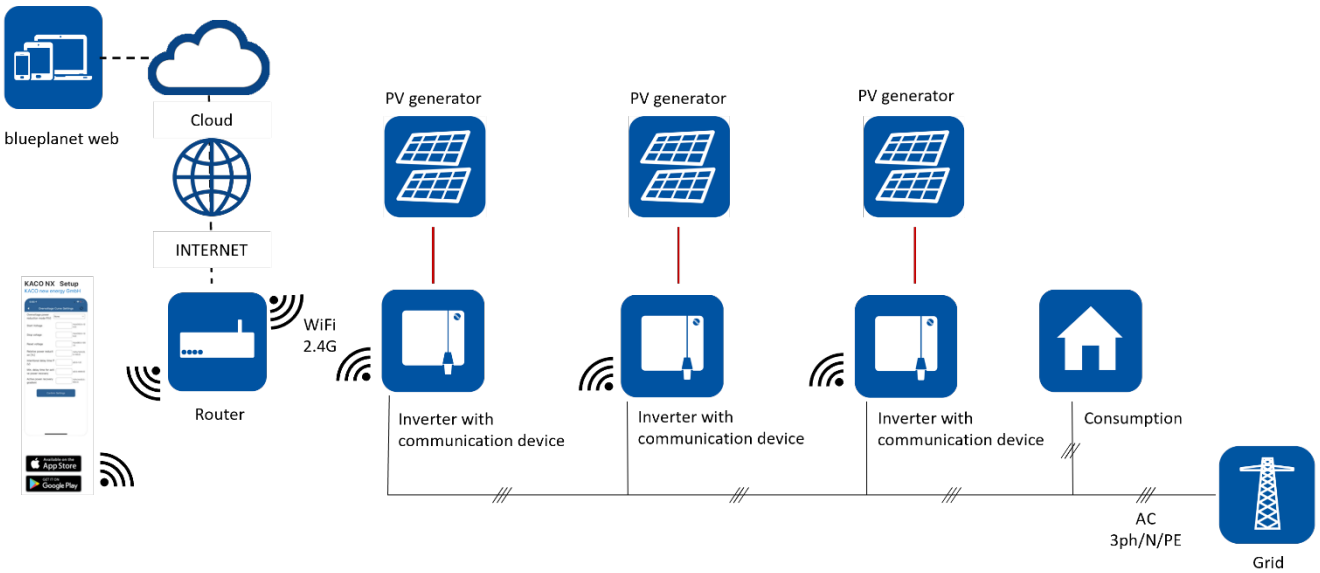

Fig. 37: System monitoring via max. 5 connected Inverter with communication device

NOTE

Please note the additional documents for the communication structure with and without data logger. These can be found in the download area on our homepage in the device order under application notes.

The Android or iOS APP can be download on the store. More Information you will find in the document “Application note – Installation and use of the APP” in download folder on our website www.kaco-newenergy.com.

9.4 Active power control with smart meter

The device can control active power output via connecting smart meter, following picture is the system connection mode through communication device.

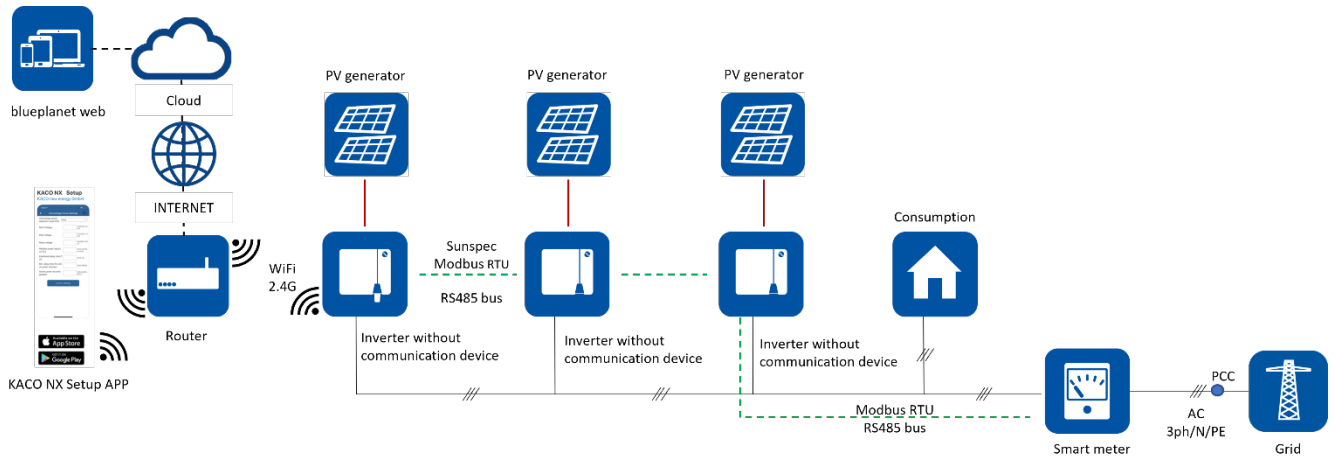

Fig. 38: System for the active power control with smart meter

Smart meter as above SDM630 - Modbus connecting method and setting baud rate method for Modbus please refer to it's user manual.

NOTE

Please note the additional documents for the communication structure with and without data logger. These can be found in the download area on our homepage in the device order under application notes.

The Android or iOS APP can be download on the store. More Information you will find in the document "Application note – Installation and use of the APP" in download folder on our website www.kaco-newenergy.com.

9.5 Performing a firmware update

You can update the software of the device to a new version using the app Android or iOS. Please visit website www.kaco-newenergy.com and download the document "Application note – Installation and use of the APP". Here you will find more information about firmware update.

10 Maintenance and troubleshooting

10.1 Visual inspection

Inspect the product and cables for visible external damage and note the operating status display, where applicable. In the event of damage, notify your installation engineer. Repairs may only be carried out by authorised electricians

DANGER

Risk of fatal injury due to contact voltages!

Removing the plug connections before disconnecting the device from the PV generator may lead to injuries and damage the device.

› During installation: Electrically disconnect the DC positive and DC negative from the protective earth (PE).

› Disconnect the device from the PV generator using the integrated DC isolator switch.

› Remove the plug connector.

DANGER

Dangerous voltage due to two operating voltages

Severe injuries or death may occur if the cables and/or terminals/busbars in the device are touched. The discharge time of the capacitors is up to 5 minutes.

› Only appropriately qualified electricians authorised by the mains supply network operator are permitted to open and maintain the device.

› Before opening the device: Disconnect the AC and DC sides and wait at least 5 minutes.

NOTE

There is not any component in the housing of the device which can be repaired by the customer.

Do not attempt to repair faults that are not described here (in the chapter on troubleshooting and fault rectification). Contact our customer service department. Only perform the maintenance work that is described here.

The device should be checked for proper operation by a qualified electrician at regular intervals and if you experience problems, you should always contact the system manufacturer service department.

10.2 Cleaning

10.2.1 Cleaning the housing

DANGER

Danger of death due to penetrating fluid

Serious injuries or death can result if moisture enters the system.

› Only use completely dry objects to clean the device.

› The device should only be cleaned from the outside.

CAUTION

Damage to the housing parts when using cleaning agents!

› If the device is contaminated, only clean the housing, cooling fins, housing cover, display with water and a cloth.

1 Use a vacuum cleaner or a soft brush to remove dust from the top of the device on a regular basis.

2 Remove dust from the ventilation inlets if necessary.

10.2.2 Cleaning the heat sink

NOTE

Refer to our service and guarantee conditions on our homepage.

The cleaning intervals must be adapted to match the ambient conditions of the installation location.

› In sandy environments, we recommend cleaning the heat sinks every quarter.

↻ Device switched off on integrated DC isolator switch and AC breaker.

↻ Have appropriate brushes at hand for cleaning.

1 Clean the free space between the cover and the heat sink using chosen brushes.

2 Clean the heat sink for air inlet and outlet with an appropriately selected brush.

NOTE: Do not use any aggressive cleaning agents and ensure that no other components come into contact with fluids.

» Cleaning completed

10.3 Shutting down for maintenance / troubleshooting

DANGER

Lethal voltages are still present in the connections and cables of the device even after the device has been switched off and disconnected!

Severe injuries or death may occur if the cables and/or terminals/busbars in the device are touched.

Only appropriately qualified electricians authorised by the mains supply network operator are permitted to open and maintain the device.

› Comply with all safety regulations and current technical connection specifications of the responsible power supply company.

↻ NOTE: Switch-off sequence.

1 Switch off the mains voltage by deactivating the external fuse elements.

2 Switch off DC supply via the DC disconnector.

DANGER! The DC lines are still live!

» Wait 5 minutes after switching off before replace the device.

10.4 Disconnecting connections

10.4.1 AC connection

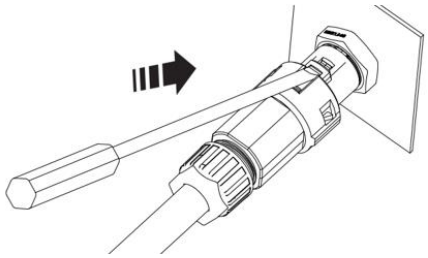

Fig. 39: Detach the AC connection plug

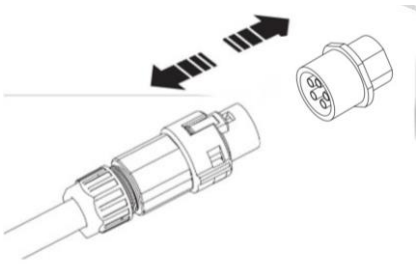

Fig. 40: Disconnect AC connection plug

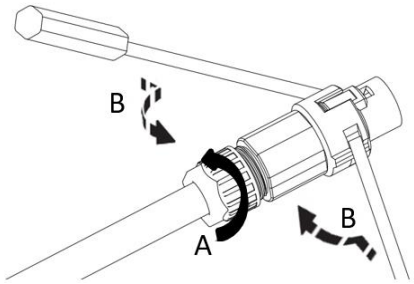

Fig. 41: Release the cable

↻ Ensure there is no AC/DC voltage present.

1 Use a screwdriver (blade size 3 mm) to push in the latch on the coupling.

2 Unlock the plug connection and pull out the connector.

3 Unscrew the cable fitting.

4 Use a screwdriver to unlock the contact carrier on both sides.

5 Remove the contact carrier from the housing.

6 Unfasten and remove the screws on the contact carrier.

10.4.2 DC connection

DANGER

Destruction of the DC plug connectors

DC plug connectors can be destroyed by arcing if disconnected while still live. It is absolutely essential that the following shutdown sequence be carried out in the correct order:

› Check that there is no current in any of the DC cables using a clip-on ammeter.

↻ Ensure there is no AC/DC voltage present.

↻ Check that there is no current using a clip-on ammeter.

↻ NOTE: Plug connectors may be unplugged under voltage, but never under load.

1 Use a screwdriver (blade width 3 mm) to push out the latch on the coupling.

2 Leave the screwdriver in place.

3 Disconnect the DC connector from the DC socket.

4 Remove wires and insert DC contact plug with equipped protective caps. (See Fig. 43.)

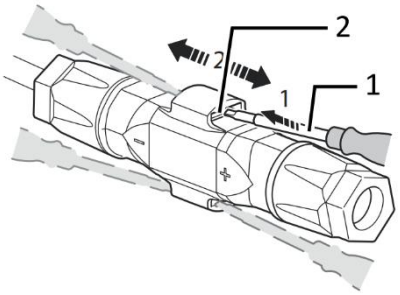

Fig. 42: Unplugging the plug connector

1	Screwdriver
2	Latch

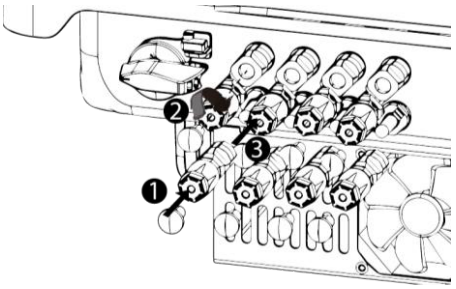

Fig. 43: Insert DC plug connection

1	Protective caps
2	DC+ contact plug
3	DC- contact plug

11 Decommissioning and dismantling

11.1 Switching off the device

DANGER

Lethal voltages are still present in the connections and cables of the device even after the device has been switched off and disconnected!

Severe injuries or death may occur if the cables and/or terminals/busbars in the device are touched.

› The device must be mounted in a fixed position before being connected electrically.

› Comply with all safety regulations and current technical connection specifications of the responsible power supply company.

› The device is only permitted to be opened or serviced by a qualified electrician.

› Switch off the grid voltage by turning off the external circuit breakers.

› Check that all AC and DC cables are completely free of current using a clip-on ammeter.

› Do not touch the cables and/or terminals/busbars when switching the device on and off.

› Keep the device closed when in operation.

DANGER

Destruction of the DC plug connectors!

DC plug connectors can be destroyed by arcing if disconnected while still live. It is absolutely essential that the following shutdown sequence be carried out in the correct order:

› Check that there is no current in any of the DC cables using a clip-on ammeter.

WARNING

Risk of burns caused by hot housing components

Housing components can become hot during operation.

› During operation, only touch the housing cover on the device.

11.2 Uninstalling the device

DANGER

Dangerous voltage due to two operating voltages

Severe injuries or death may occur if the cables and/or terminals/busbars in the device are touched. The discharge time of the capacitors is up to 5 minutes.

› Only appropriately qualified electricians authorised by the mains supply network operator are permitted to open and maintain the device.

› Before opening the device: Disconnect the AC and DC sides and wait at least 5 minutes.

↻ Device disconnected and secured against restart.

1 Disconnect AC connection plug from the device. AC connection [See section 10.4.1 on Page 29]

2 Detach the DC cables from the DC plug connectors and furnish with protective caps. DC connection [See section 10.4.2 on Page 30]

3 Remove the communication device.

» The device is uninstalled. Proceed with disassembly

11.3 Disassembling the device

↻ Device has been switched off and uninstalled.

1 Remove the screw that prevents the device from being lifted off the mount.

2 Use the lateral openings and lift the device off the mount.

» Device removed. Proceed with the packaging process.

11.4 Packaging the device

↻ Device has been uninstalled.

1 If possible, always pack the device in the original packaging. If this is no longer available, an alternative is to use equivalent packaging.

2 You must be able to close the box completely and it must be able to accommodate the weight and size of the device.

11.5 Storing the device

⚠ CAUTION

Property damage as a result of condensation

Faulty storage can form condensate in the device and impair the device functioning (e.g. storage outside the ambient conditions or temporary relocation from a cold to a hot environment).

Store in accordance with the technical data > Environmental data.

› Prior to installation, check the inner area for condensation and if necessary, allow it to dry sufficiently before installation.

↻ Device packaged.

Store the device at a dry location, in accordance with the ambient temperature range Environmental data.

12 Disposal

⚠ CAUTION

Risk to the environment if disposal is not carried out in the correct manner.

For the most part, both the device and the corresponding transport packaging are made from recyclable raw materials.

Device: Do not dispose of faulty devices or accessories together with household waste. Ensure that the old devices and any accessories are disposed of in a proper manner.

Packaging: Ensure that the transport packaging is disposed of properly.

13 Service and warranty

If you need help solving a technical problem with one of our KACO products, please contact our service hotline. Please have the following information ready so that we can help you quickly and efficiently:

- Device name / serial number
- Date of installation / Start-up report
- Fault message shown on the display / Description of the fault / Did you notice anything unusual? / What has already been done to analyse the fault?
- Module type and string circuit
- Consignment identification / Delivery address / Contact person (with telephone number)
- Information about the accessibility of the installation site

You can find the following items and other information at our web site Kaco-newenergy:

- our current warranty conditions,
- a complaint form,
- a form for registering your device. Please register your device without delay. In this manner, you can assist us in providing you with the quickest service possible.

14 Appendix

14.1 EU Declaration of Conformity

Manufacturer's name and address	KACO new energy GmbH Werner-von-Siemens-Allee 1 74172 Neckarsulm, Germany, Germany	
Product description	Photovoltaic feed-in inverter	
Type designation [KACO art. no.]	KACO blueplanet 3.0 NX3 M2 WM OD IIG0	[1002043]
	KACO blueplanet 5.0 NX3 M2 WM OD IIG0	[1002044]
	KACO blueplanet 8.0 NX3 M2 WM OD IIG0	[1002045]
	KACO blueplanet 10.0 NX3 M2 WM OD IIG0	[1002046]
	KACO blueplanet 15.0 NX3 M2 WM OD IIG0	[1002048]
	KACO blueplanet 20.0 NX3 M2 WM OD IIG0	[1002049]

The subject matter of the declaration described above complies with the relevant legal requirements set out in the European Union Directive of 26 February 2014 on the approximation of the laws of the Member States relating to electromagnetic compatibility (2014/30/EU) , the Low Voltage Directives (2014/35/EU) and of 16 April 2014 the Radio Equipment Directive (2014/53/EU).

The item is compliant with the following standards:

RED 2014/53/EU	**Safety of the device**
"Directive 2014/53/EU of the European Parliament and of the Council of 16 April 2014 on the harmonisation of the laws of the Member States relating to the making available on the market of radio equipment and repealing Directive 1999/5/EC"	EN 62109-1:2010 EN 62109-2:2011
	Interference immunity
	EN 61000-6-2:2005+AC:2005
	EN 62920:2017 Class A
	EN 62920:2017/A11:2020
	Emitted interference
	EN 55011:2016+A1:2017 group 1, class B
	EN 55011:2016/A11:2020
	EN 61000-6-3:2007 + A1:2011 + AC:2012
	EN 62920:2017 Class B
	EN 62920:2017/A11:2020
	Secondary effects on the grid
	EN 61000-3-2:2014*
	EN 61000-3-3:2013*
	EN 61000-3-12:2011 **
	EN 61000-3-11:2000 **
	Safety and Health
	EN 62311:2008
	Effective use of the frequency spectrum
	EN 300 328 V2.2.2
2011/65/EU	**RoHS**
"Directive on the restriction of the use of certain hazardous substances in electrical and electronic equipment"	EN IEC 63000:2018 (Technical documentation for the assessment of electrical and electronic equipment with regard to the restriction of hazardous substances)

* valid for device types with a nominal current ≤16 A (art. no. 1002043, 1002044, 1002045, 1002046)
** valid for device types with a nominal current ≥16 A (art. no. 1002048,1002049)

In addition, the following relevant standards were applied:

Electromagnetic compatibility

EN 301 489-1 V 2.2.3

EN 301 489-17 V 3.2.4

The types mentioned above are therefore labelled with the CE mark.

Unauthorised modifications to the supplied devices and/or any use of the devices that is contrary to their intended use render this Declaration of Conformity null and void.

This declaration of conformity is issued under the sole responsibility of KACO new energy GmbH.

Neckarsulm, 22.06.2022

KACO new energy GmbH

Haag Matthias

Digital signiert von Haag Matthias
DN: cn=Haag Matthias, c=DE, o=Siemens, email=matthias.haag@kaco-newenergy.de
Datum: 2022.06.22 23:16:57 +02'00'

i.V. Matthias Haag
Head of R&D and Technology

Neckarsulm, 22.06.2022

KACO new energy GmbH

Kittel Thomas

Digital signiert von Kittel Thomas
DN: cn=Kittel Thomas, o=Siemens, email=thomas.kittel@kaco-newenergy.de
Datum: 2022.06.23 08:47:54 +02'00'

i.V. Thomas Kittel
Head of Quality Management

3015332-02-220928

The text and figures reflect the current technical state at the time of printing. Subject to technical changes. No liability for printing errors.

KACO

new energy.

Werner-von-Siemens-Allee 1 · 74172 Neckarsulm · Germany · Phone +49 7132 3818-0 · info@kaco-newenergy.de · www.kaco-newenergy.de